SPECIFICATION SHEET

OLYMPIA

ELITE SINGLE HANDLE TUB AND SHOWER TRIM SET ONLY

P-2300T SHOWN **ADA**

Model #: _____

Specific Features: _____

Project Name: _____

Submitted For: _____

Date: _____

- Metal Lever Handle
- Face Plate
- Adjustable Showerhead, Arm & Flange
- Combo 1/2" IPS/Slip-On Diverter Tub spout

Model #	Features	Finish	
P-2300T*		CP	
P-2300T-BN*		PVD BN	
P-2300T-ORB*		ORB	
P-2300T-E1.75	1.75 GPM Flow Rate	CP	
P-2300T-E1.75-BN	1.75 GPM Flow Rate	PVD BN	
P-2300T-E1.5	1.5 GPM Flow Rate	CP	
P-2300T-E1.5-BN	1.5 GPM Flow Rate	PVD BN	

* Showerhead limited to 2.5 GPM Flow Rate

Olympia products are engineered and manufactured to meet the following standards and codes:

ASME A112.18.1
IAPMO LISTED

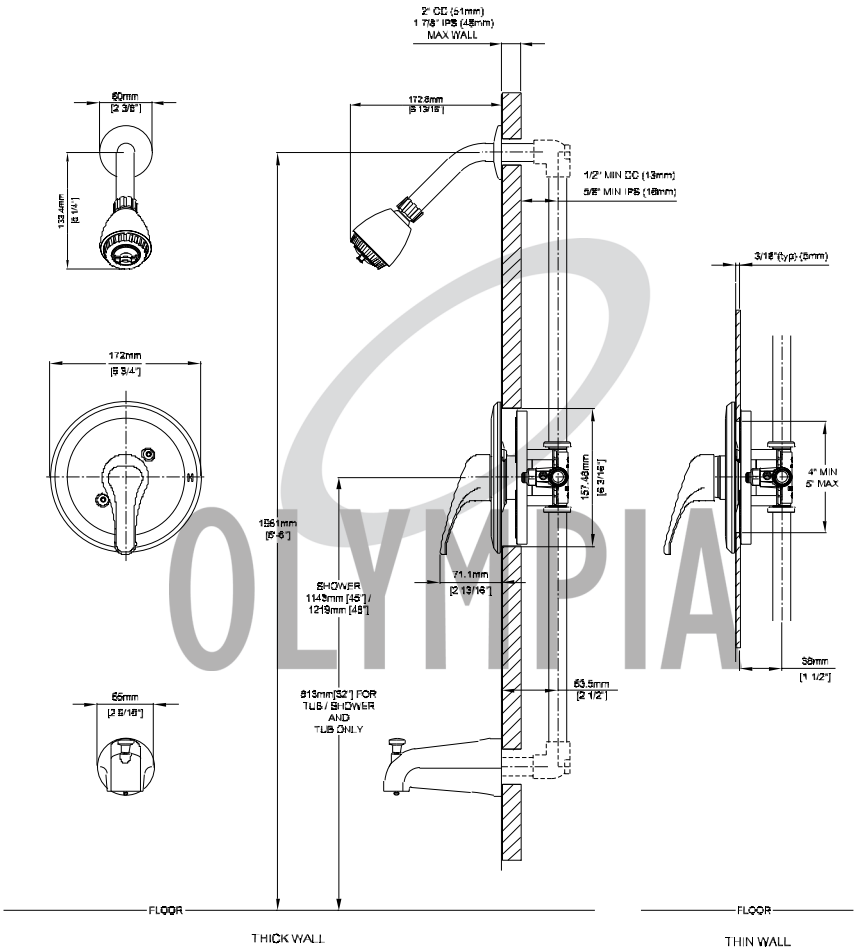

Antioch, TN
www.olympiafaucets.com
Olympia Faucets, Inc. © 2009
A Pioneer Industries Inc. Brand
DMSPP-2300T/REV. 10.08